Power input connectors

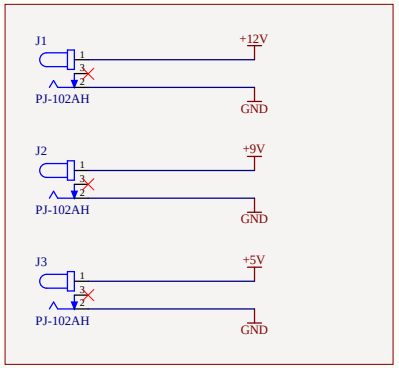

Power output connectors

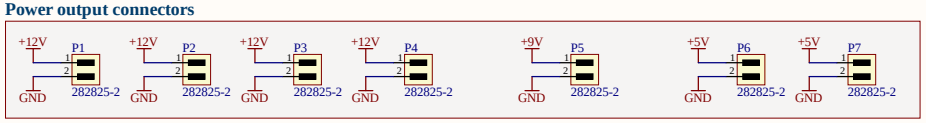

Microcontroller

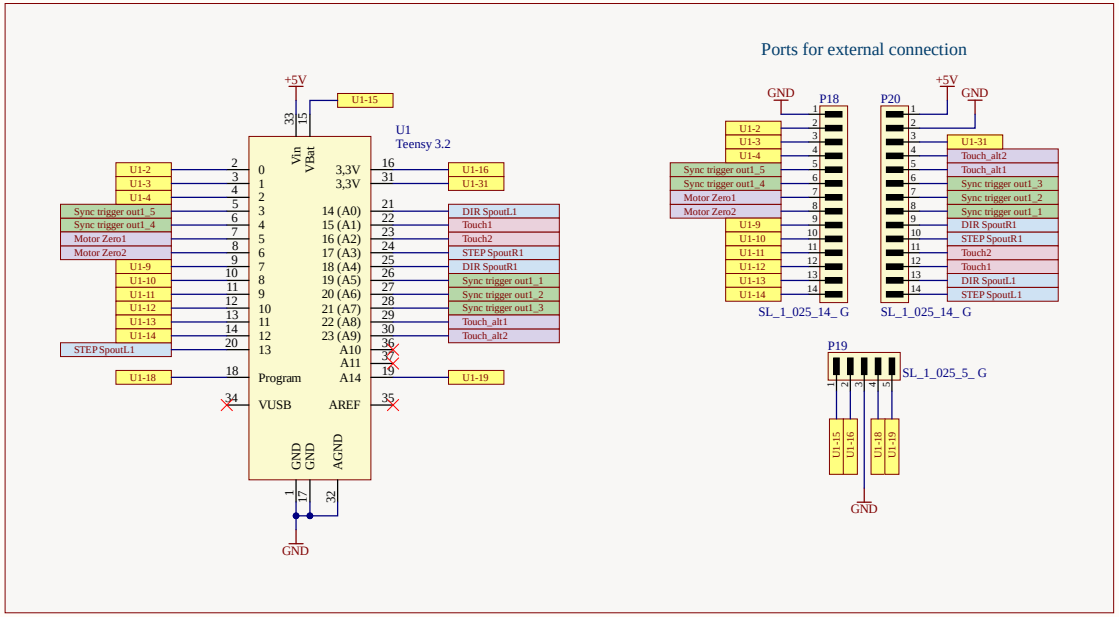

Motors

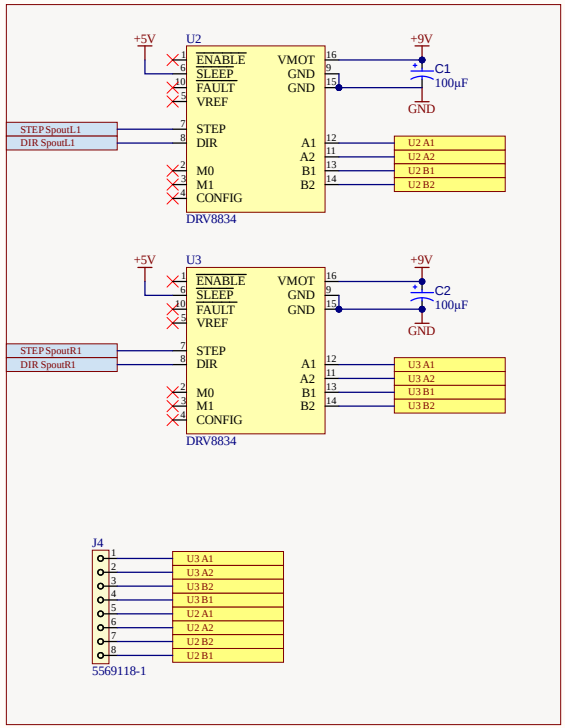

Speaker / Trigger

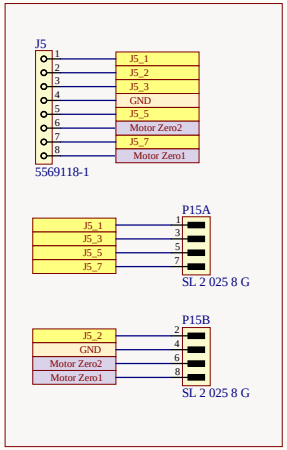

Photodiodes, 5V

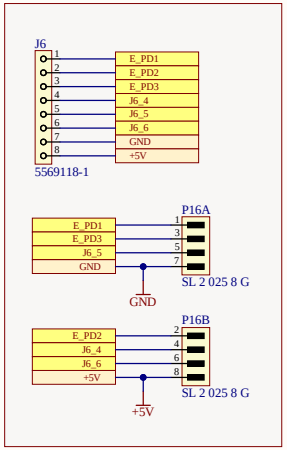

Wheel, Touch, 12V

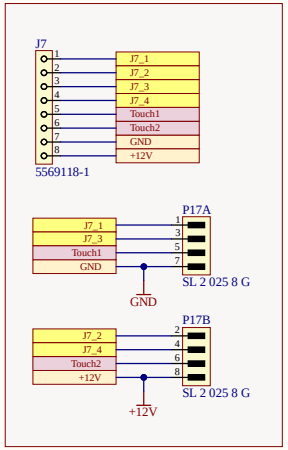

Sync trigger out

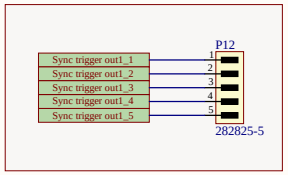

Left Touch (T1)

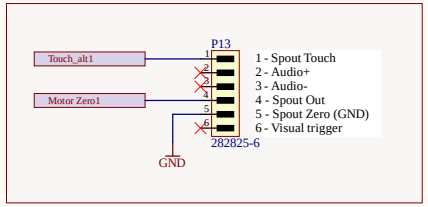

Right Touch (T2)

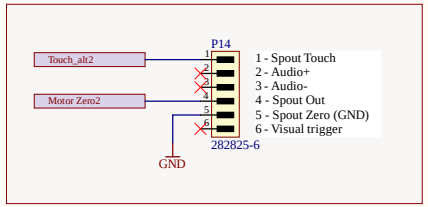

Titel	Bpod Controller v5		JÜLICH Forschungszentrum
PW-Nr.	PWxxxx	Revision 1	Size A3
Drawn by	D. Hellenbrandt		Company: Forschungszentrum Jülich GmbH, Wilhelm-Johnen-Straße, 52428 Jülich
Date 10.02.2026	Time 08:47:58	Sheet 1 of 1	Institut: IBI-TAE
File	O:\Dokumentation\Geräte_Dokumentation\IBI-3\Simon Musall\Bpod Verhaltenssystem\controller\Altium\Controller Bpod\Bpod Controller v5\Bpod Controller v5.SchDoc		

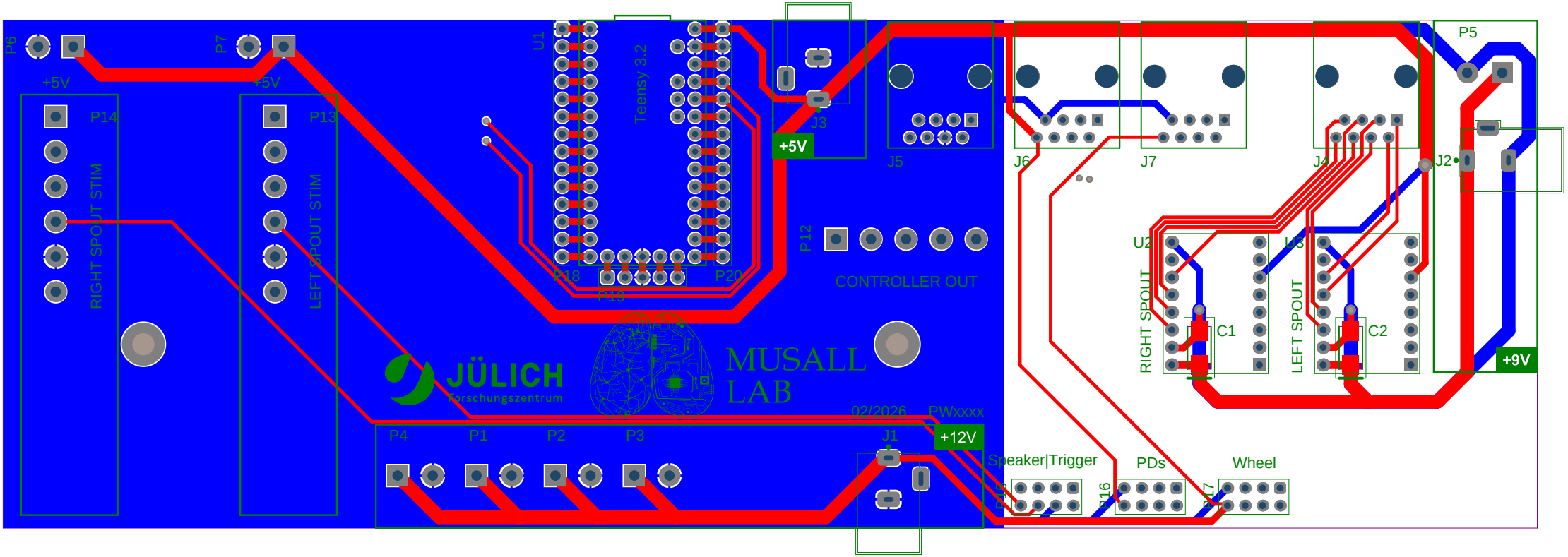
P6
P7
+5V
+5V
P14
P13
RIGHT SPOUT STIM
LEFT SPOUT STIM
U1
Teensy 3.2
P18
P19
P20
+5V
J3
J5
P12
CONTROLLER OUT
J6
J7
J4
J2
P5
U2
U3
RIGHT SPOUT
LEFT SPOUT
C1
C2
+9V
JÜLICH
Forschungszentrum
MUSALL
LAB
02/2025
PWxxxx
P4
P1
P2
P3
J1
+12V
Speaker|Trigger
PDs
Wheel
P15
P16
P17